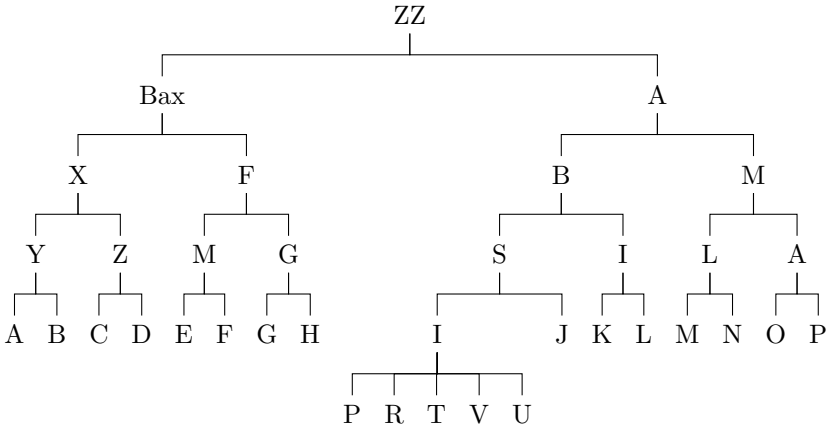
ZZ
Bax
A
X
F
B
M
Y
Z
M
G
S
I
L
A
A B C D E F G H
I
J K L M N O P
P R T V U

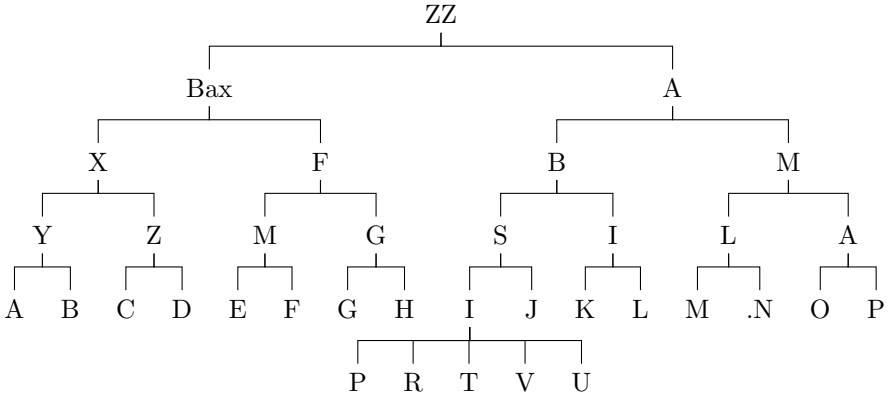
ZZ
Bax
A
X
F
B
M
Y
Z
M
G
S
I
L
A
A B C D E F G H I J K L M .N O P
P R T V U